TSURUMI PUMP

NK - SERIES
SEMI-VORTEX - DEWATERING PUMPS

SECTIONAL VIEW

NK2-22

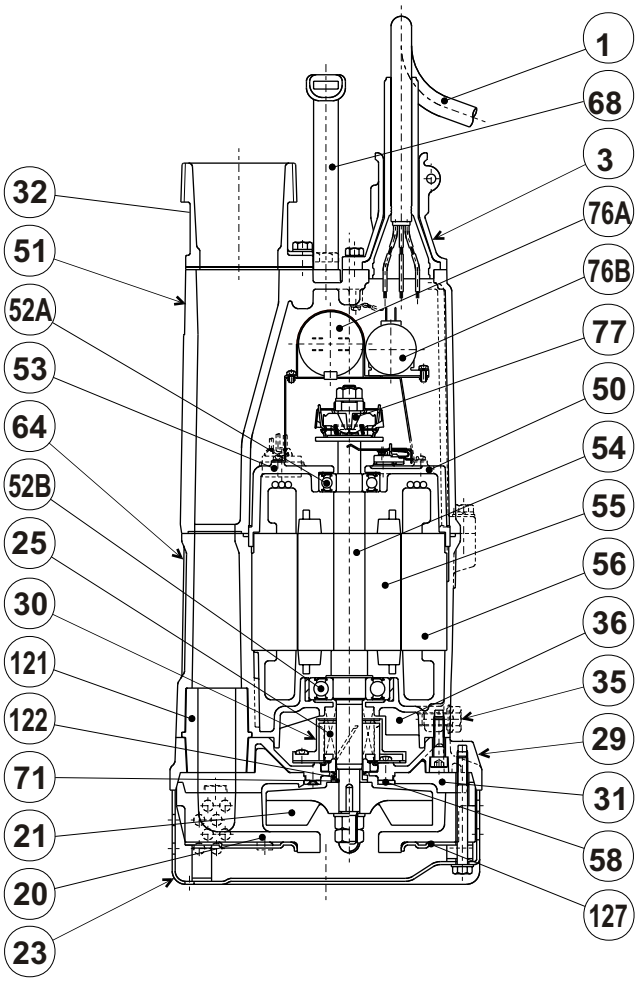

ITEM#	DESCRIPTION	MAIN MATERIAL / NOTE	RELATED ASTM, AISI CODE	RELATED EN CODE	Q'TY
1	Power Cable	Chloroprene Sheath AWG14/3-32ft			1
3	Stuffing Box	Aluminium Alloy Die Casting	B85 383.0	EN 1706 AC-46100	1
20	Pump Casing	Butadiene Rubber + Natural Rubber			1
21	Impeller	Ductile Cast Iron	A536 100-70-03	EN 1563 GJS-700-2	1
23	Suction Strainer	Steel (Cold Rolled)	A109/A1008	EN 10130	1
25	Mechanical Seal	Silicon Carbide / H-20T			1
30	Oil Lifter	PBT Plastic w/(GF+MD)40			1
29	Oil Casing	Aluminium Alloy Die Casting	B85 383.0	EN 1706 AC-46100	1
31	Wear Ring	Butadiene Rubber			1
32	Discharge Connection	Cast Iron / NPT 3"	A48M Class30B	EN 1561 GJL-200	1
35	Oil Plug	Stainless Steel	S 30400	1.4301	1
36	Lubricant	Turbine Oil ISO VG32 or SAE 10W-20			
50	Motor Bracket	Aluminium Alloy Die Casting	B85 383.0	EN 1706 AC-46100	1
51	Motor Head Cover	Aluminium Alloy Die Casting	B85 383.0	EN 1706 AC-46100	1
52A	Upper Bearing	#6204ZZC3			1
52B	Lower Bearing	#6305ZZC3			1
53	Motor Protector				1
54	Shaft	Stainless Steel	S 40300	1.4000	1
55	Rotor				1
56	Stator				1
64	Motor Housing	Aluminium Alloy Die Casting	B85 383.0	EN 1706 AC-46100	1
68	Handle	Steel (Cold Rolled) + NBR Rubber	A109/A1008	EN 10130	1
71	Shaft Sleeve	Stainless Steel	S 30400	1.4301	1
76A	Capacitor				1
76B	Capacitor				1
77	Centrifugal Switch				1
121	Duct Sleeve	Styrene Butadiene Rubber			1
122	V-Ring	Nitrile Butadiene Rubber			1
127	Fixing Plate	Steel (Cold Rolled)	A109/A1008	EN 10130	1